C-POWER **C-POWER BATTERY**

Data Sheet ***Model No.: CPH-49C3500S***

Type	: Rechargeable Nickel Metal Hydride Cylindrical Cell
Nominal Dimension (with Sleeve)	: Φ=25.7mm H =49.0mm
Discharge	: Recommended Max discharge current 10500mA
Nominal Voltage	: 1.2V
Capacity	: Minimum: 3500mAh Typical: 3675mAh When discharged at 700mA to 1.0V at 20℃
Standard Charge	: 350mA for 16hrs at 20℃
Fast Charge	: 1750mA to 3500mA (0.5C to 1C) Charge termination control recommended Control parameters: −△V : 5～10mV DT/dt : 0.8～1℃/min TCO : 45～50℃ Timer : 105% nominal input
Service Life	: > 500 cycles (IEC standard)
Continuous Overcharge	: 350mA maximum current for 28 days No conspicuous deformation and/or leakage
Weight (approximate)	: 79.0g
Internal Resistance	: ≤9mΩ upon fully charged at 1000Hz
Charge Retention	: ≥70% (IEC standard)
Ambient Temperature Range (Recommended)	: Standard Charging : 0 to 45℃ Fast Charging : 10 to 35℃ Discharging : −20 to 60℃ Storage : −20 to 35℃

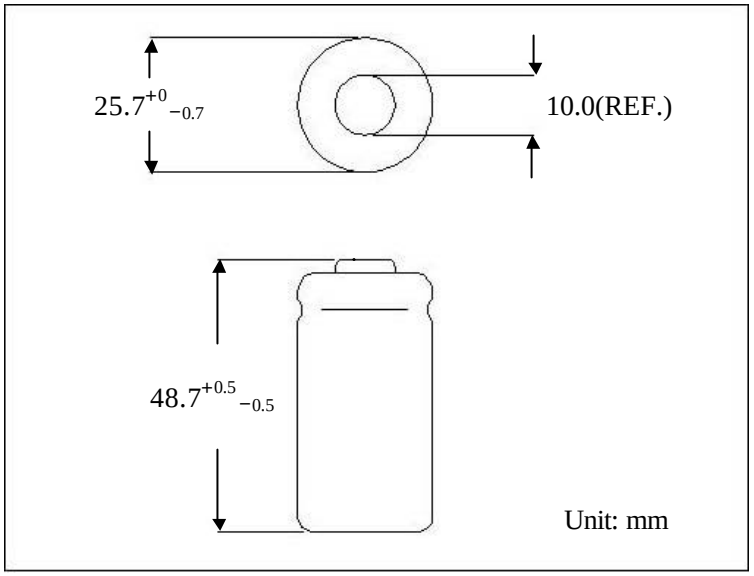

Charge

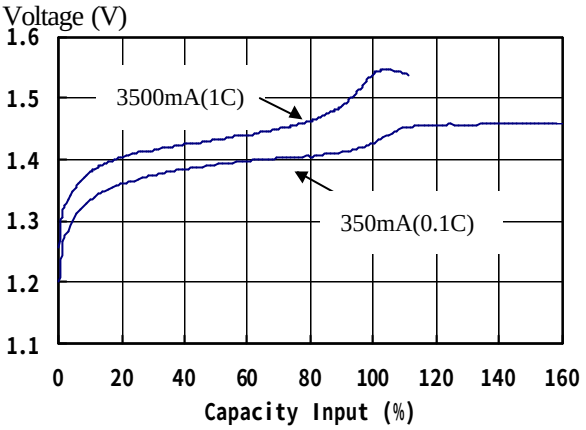

Low Rate Discharge

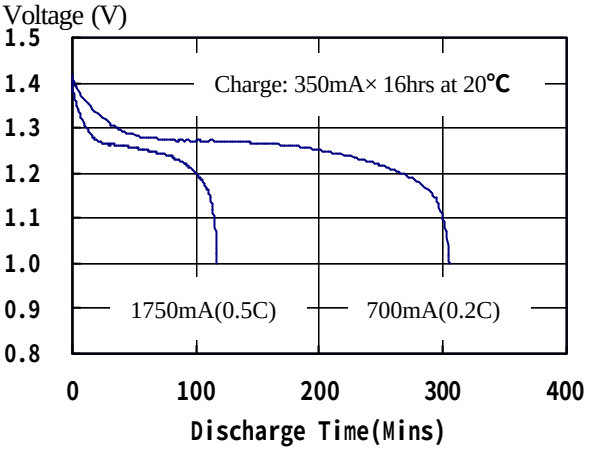

High Rate Discharge

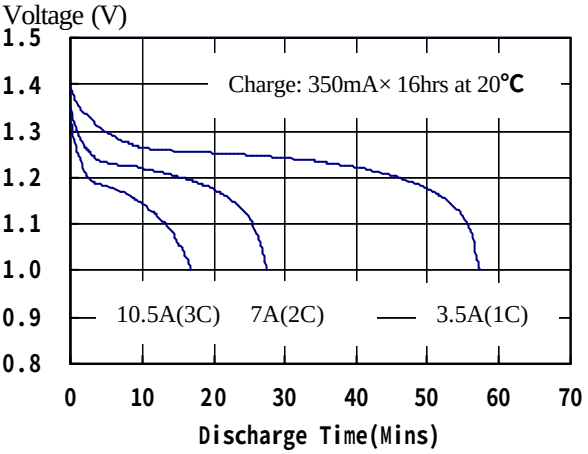

* The information contained in this document is for reference only and should not be used as a basis for product guarantee or warranty. For applications other than those described here, please consult C-POWER.

Note: All the above values subject to change without prior notice.